9.10. Play Tower “Knight‘s Tower”

All measures in cm (if not other stated).
M 1:70

Foundations need to be made after the production of our playgrounds due to the fact that we cannot guarantee information of the wood due to its irregular growth habits. Technical changes reserved. Please check the measures when our goods arrive. Our goods meet the standards of DIN EN 1176. For delivery is the offer text relevant.

Measures total:	approx. 630 x 550 x 400 (480) cm (L, W, H [H with depth below ground])
Fall area:	approx. 9,3 x 9,0 m For safety reasons do not align slides towards south! (heat build-up due to solar radiation)
Protective surface:	Sand, grit, wooden chaffs
Foundation:	8 units 40 x 40 x 80 cm (L, W, Depth), 1 unit 60 x 40 x 80 cm (L, B, T), 1 unit 60 x 50 x 60 cm (L, W, Depth) each +10 cm drainage-fine gravel layer, 1 unit 60 x 40 x 60 cm (L, W, Depth)
Assembly and instalation:	2 people./approx. 8 Std.
Weight:	größtes Teil approx. 650 kg
Intended age group:	from approx. 3 years of age on

View:

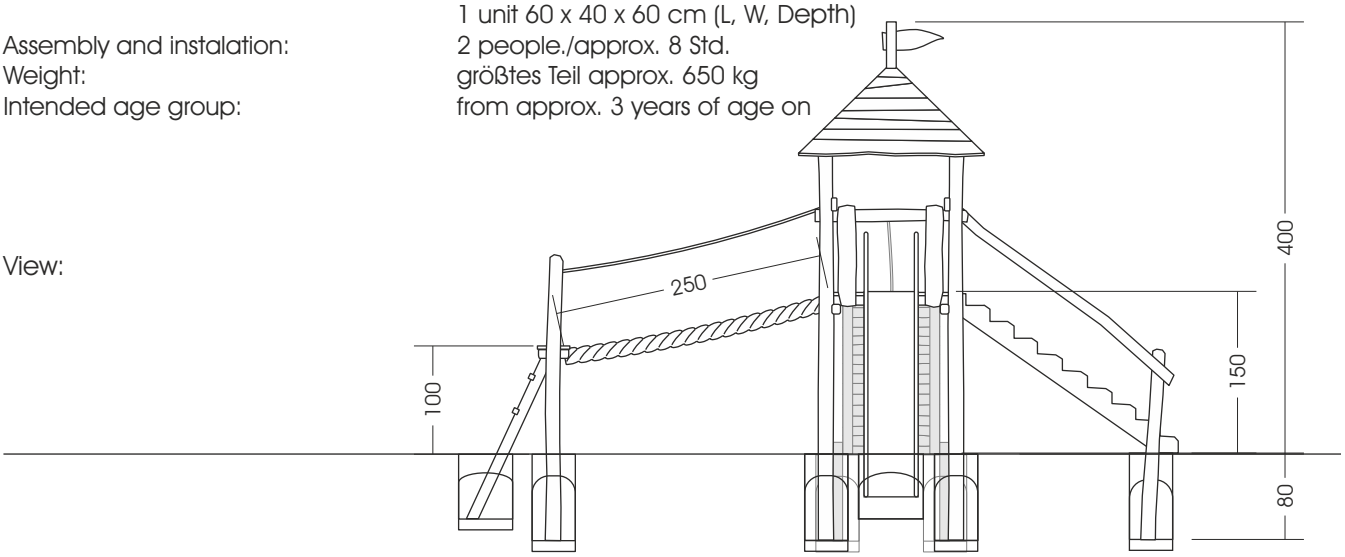

Top view:

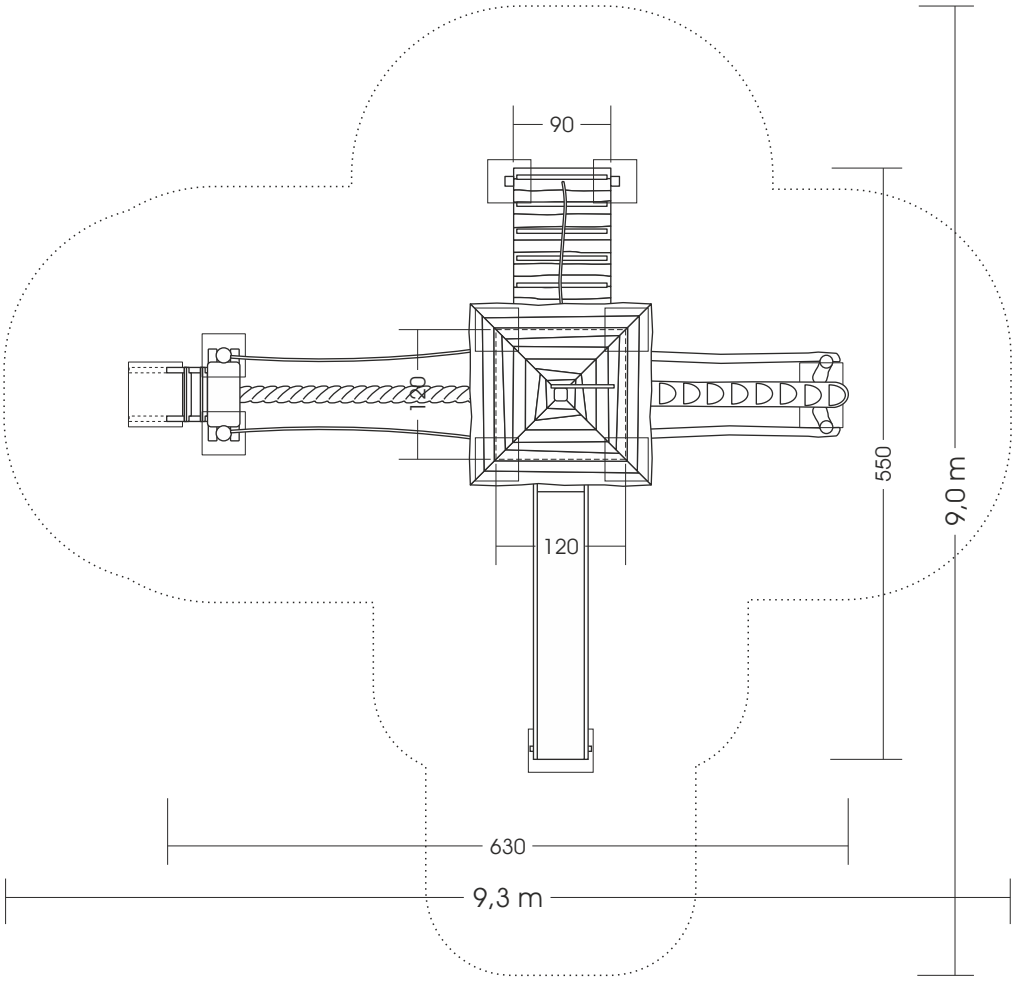

ziegler® FREIZEITANLAGEN E.K.
Spielplätze von A-Z
Am Dreieck 10, 04828 Zeititz I ✆ +49 3425 8543-0 I www.ziegler-spielplatz.de