# 4.03.04. Spring Animal “Whale”

All Measures in cm (if not other stated)

M 1:30

Foundations need to be made after the production of our playgrounds due to the fact that we cannot guarantee information of the wood due to its irregular growth habits. Technical changes reserved. Please check the measures when our goods arrive. Our goods meet the standards of DIN EN 1176. For delivery is the offer text relevant.

| | |
|---|---|
| Measures total: | approx. 65 x 25 x 75 (160) cm (L, B, H [H with depth below ground]) measures may vary depending on the motive |
| Fall Area: | approx. 3,5 x 3,1 m |
| Protective surface: | Top soil, gras |
| Foundation: | 1 Unit 60 x 60 x 85 cm (L, W, Depth) |
| Assembly and installation: | 2 people/approx. 1 h |
| Weight: | total approx. 60 kg |
| Designed for the age of: | from 2 years of age on |

View:

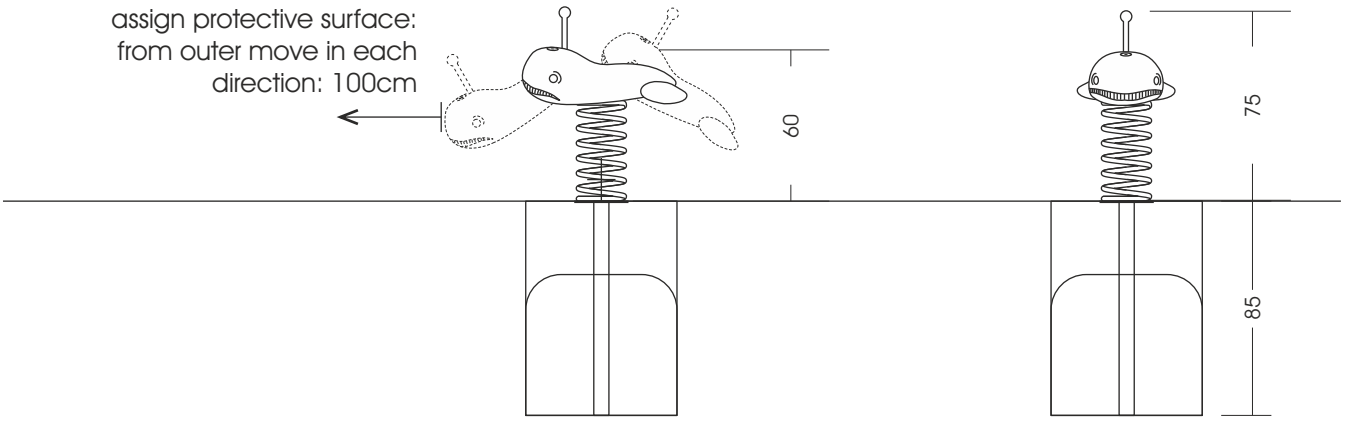


Top View:

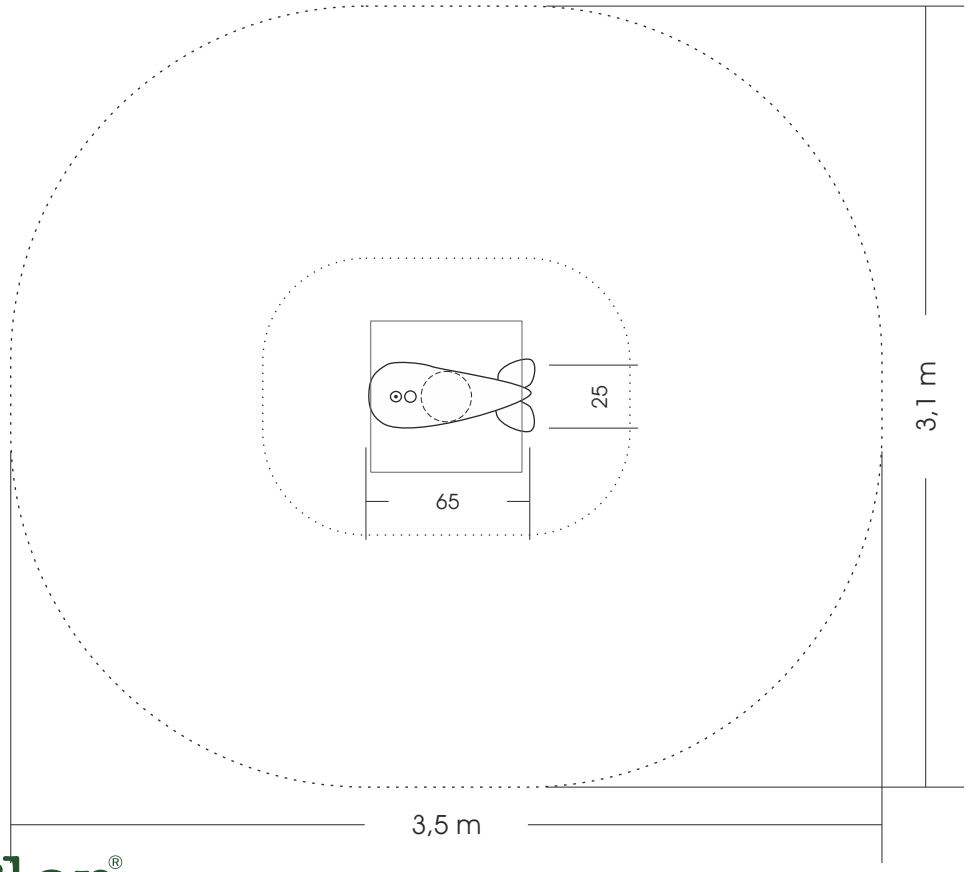


ziegler® FREIZEITANLAGEN E.K.
Spielplätze von A-Z
Am Dreieck 10, 04828 Zeititz I ✆ +49 3425 8543-0 I www.ziegler-spielplatz.de